Exploded

H3035 PULLDOWN

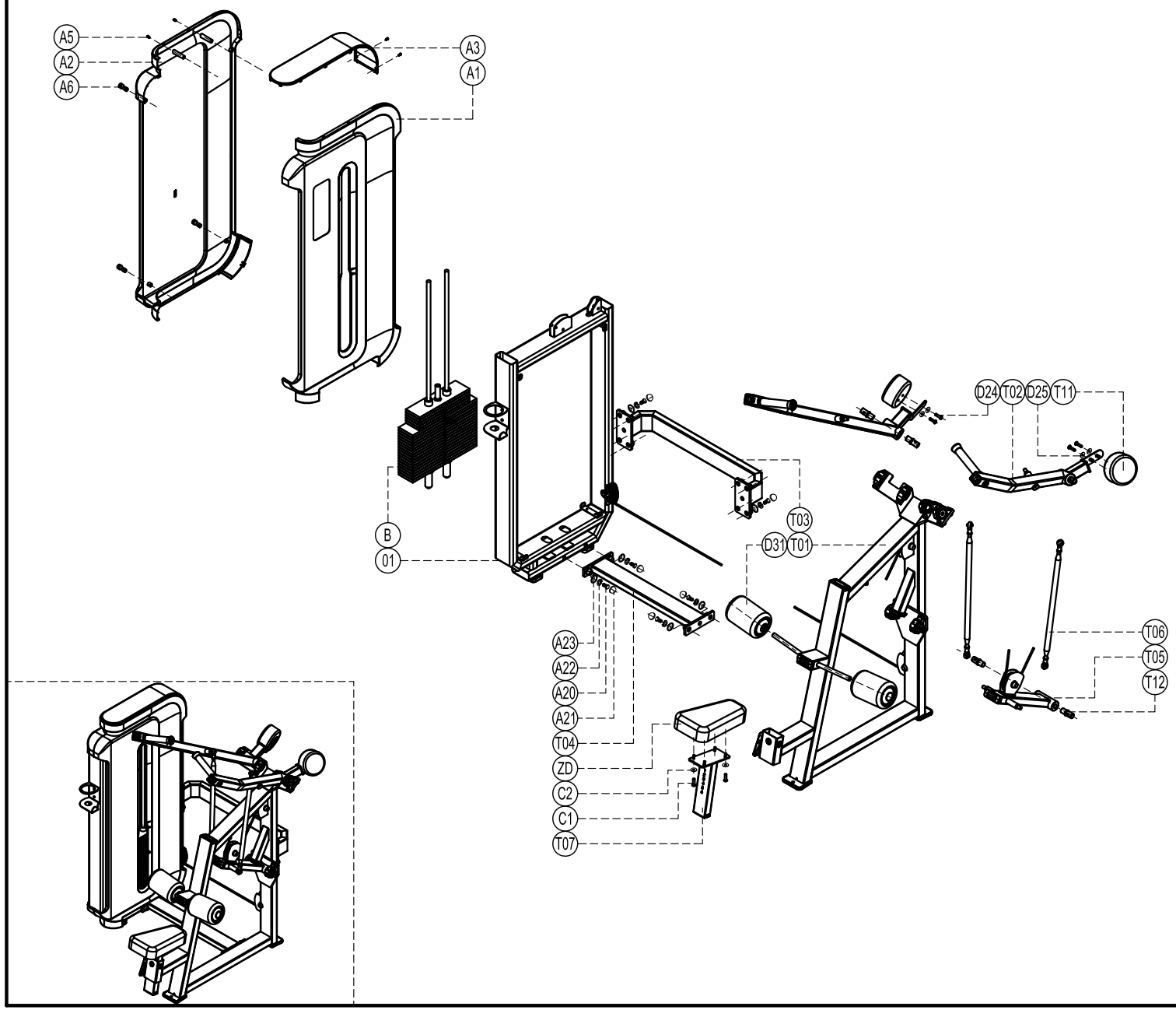

please note :prats didn't demolitionde part
and fast eners not listde on the introduction

Number	Name	Quantity
D31	Cushion roller set PM002	2
D25	Flat washer φ12	4
D24	Cup head inner hex screw M12*30	4
C2	Flat washer φ8	4
C1	Cup head inner hex screw M8*35	4
B	weight stack set	1
A23	Gasket DQ003	12
A22	Spring washer φ12	12
A21	Screw cap S208	12
A20	Outer hex screw M12*35	12
A6	Cup head inner hex screw M5*15	8
A5	Cup head cross tapping screw ST3*8	4
A3	Top cover	1
A2	Back shroud	1
A1	Front shroud	1
DZ	Upholstery DZ203	1
T12	Fission shaft	6
T11	Round weight	2
T07	Cusion selection	1
06	Connector	2
05	Backrest frame	1
04	Bottom connector	1
03	Back connection set	1
02	Movable arm set	2
01	Main frame	1
T01	Door frame	1